© 2008 Moody/Nolan, Inc.

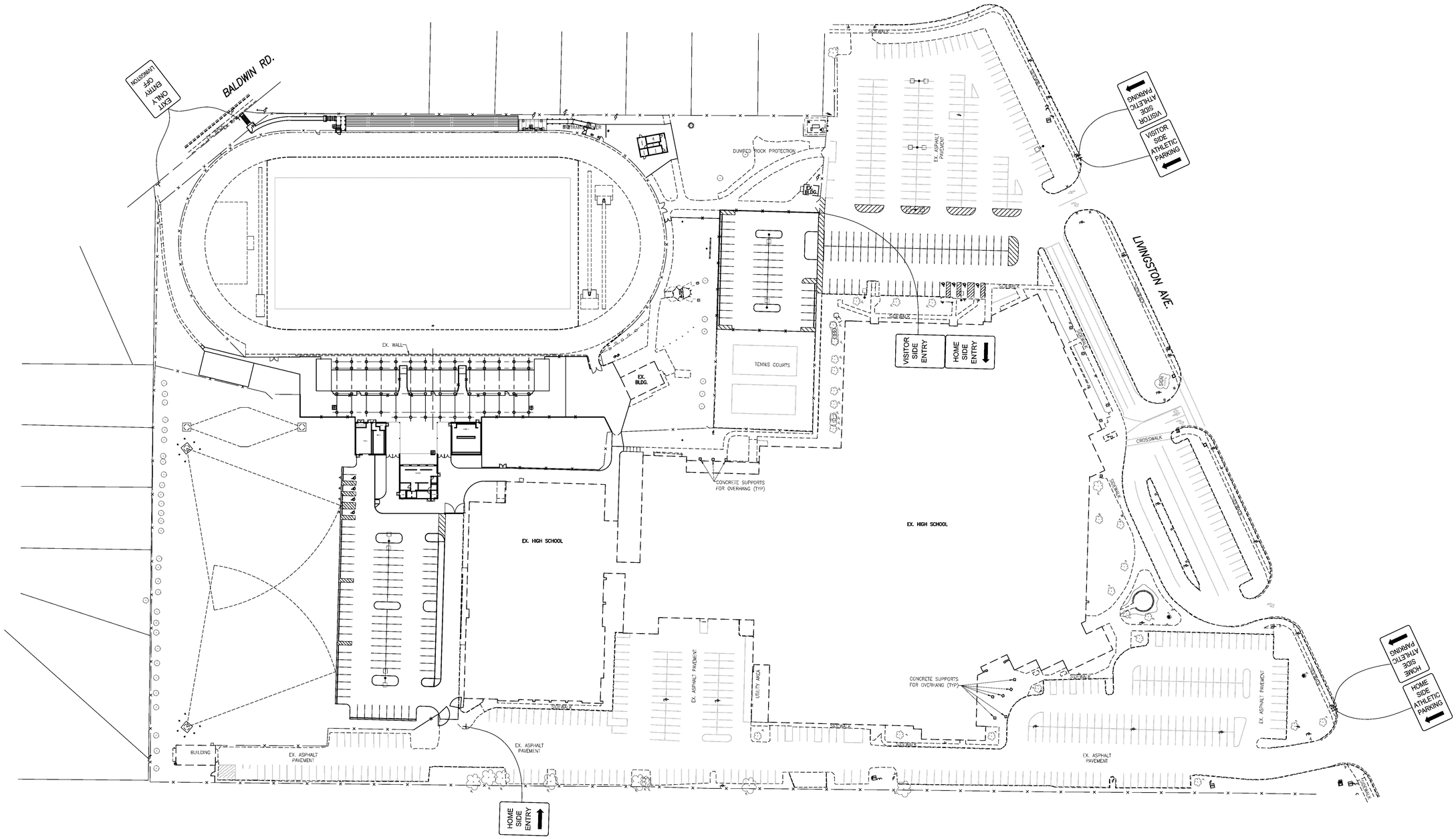

0 50 100
SCALE: 1"=50'

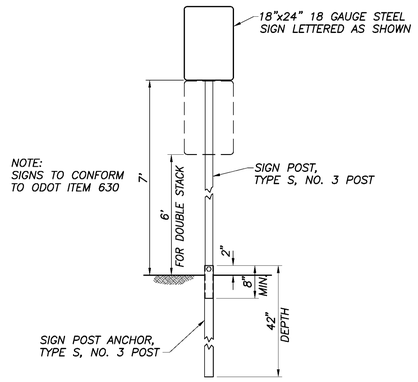

SIGN DETAIL
NO SCALE

NOTE:
FINAL SIGN WORDING AND LOCATION TO BE COORDINATED WITH OWNER.

#	Date	Change Description
	3/30/11	ADDENDUM #3 – NEW SHEET

Reynoldsburg High School Site & Bleachers - Phase II
6699 E. Livingston Avenue
Reynoldsburg, OH. 43068
for
Reynoldsburg City Schools

MOODY•NOLAN, INC.
architecture civil engineering interior architecture
300 Spruce Street
Suite 300
Columbus, Ohio 43215
Phone: (614) 461-4664
Fax: (614) 280-8881
www.moodynolan.com

STATE OF OHIO MARK R. LARIMER 69331 REGISTERED PROFESSIONAL ENGINEER

Dwg. Coord.: Tech. Coord.: MIN # 08177.1

SIGNAGE PLAN LIVINGSTON AVE.

CI1.6

BID DOCUMENTS

March 17, 2011

DRAWING: J:\08177 Reynoldsburg Athletic LFY\-Ex HS Bleachers\CADD\08177-1 CI1-6 Signage Plan.dwg
DATE: 3/30/2011 9:39:00am